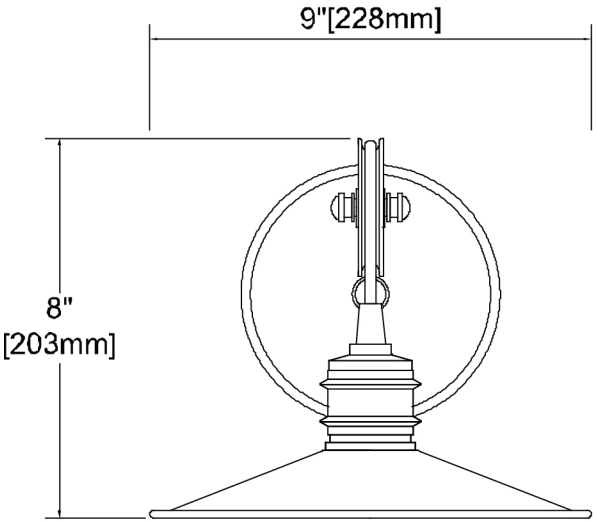
9"[228mm]
8"
[203mm]

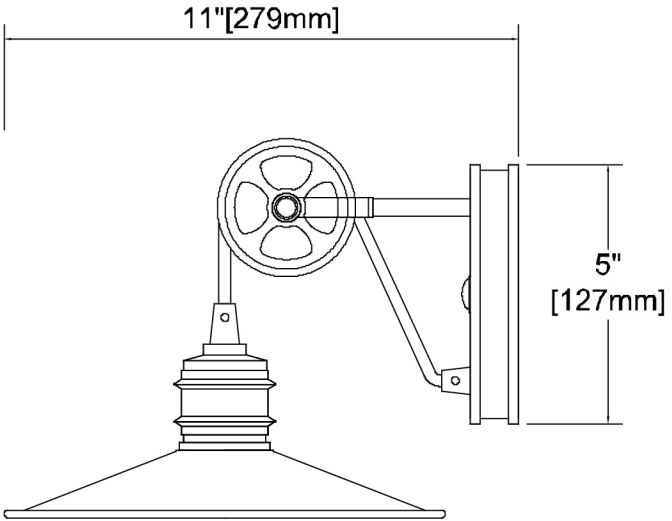
11"[279mm]
5"
[127mm]