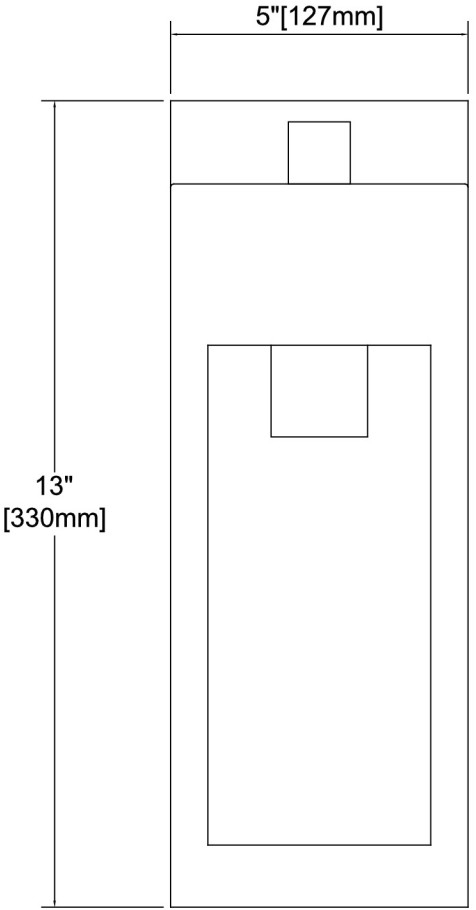
5"[127mm]
13"
[330mm]

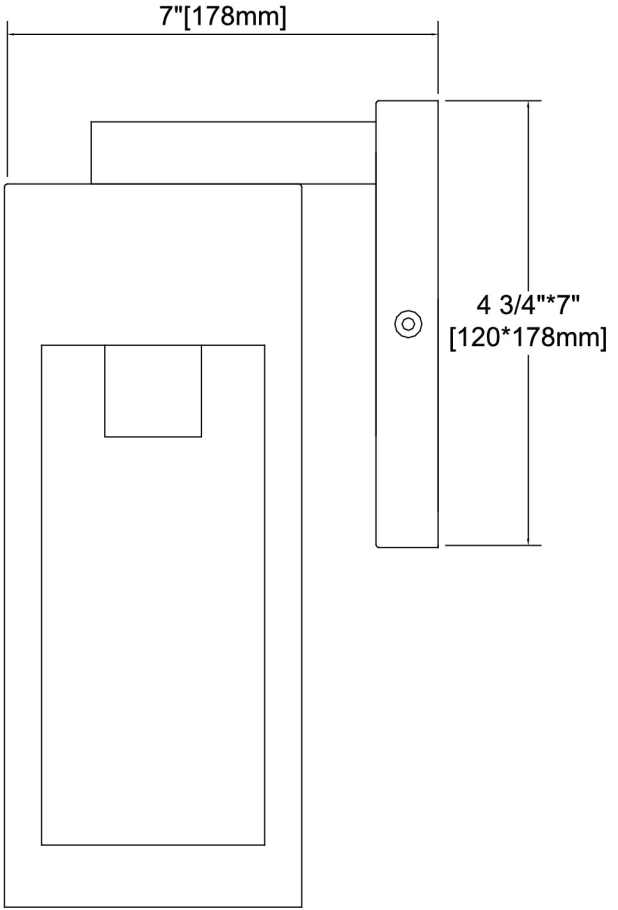
7"[178mm]
4 3/4"*7"
[120*178mm]