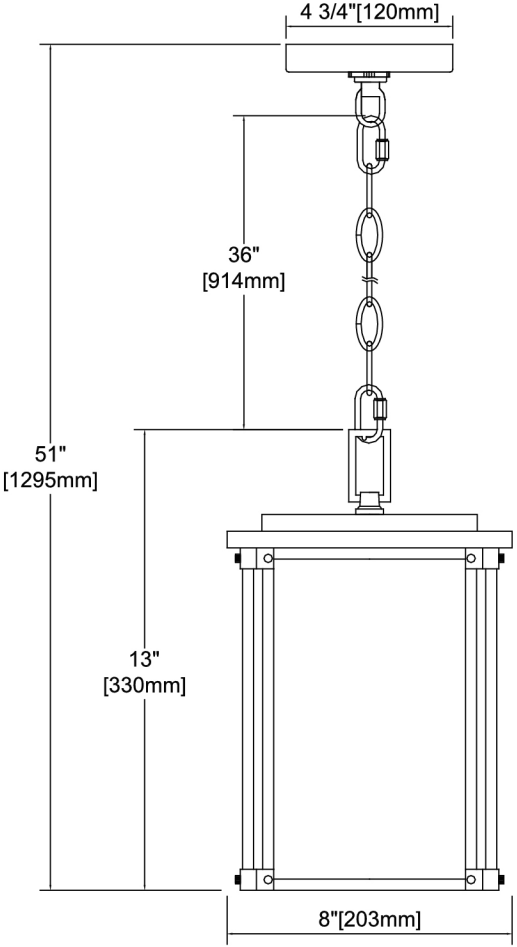
4 3/4"[120mm]
36"
[914mm]
51"
[1295mm]
13"
[330mm]
8"[203mm]