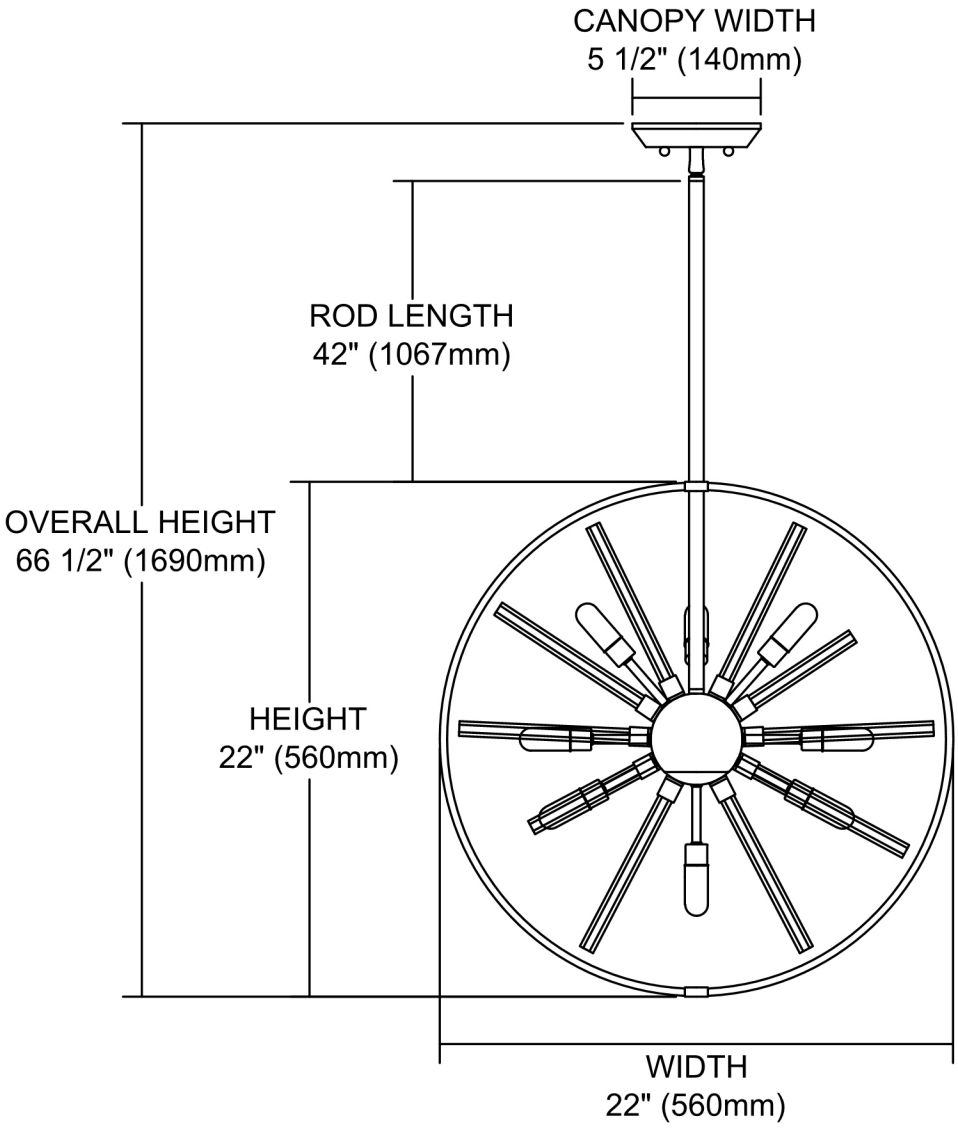
CANOPY WIDTH
5 1/2" (140mm)
ROD LENGTH
42" (1067mm)
OVERALL HEIGHT
66 1/2" (1690mm)
HEIGHT
22" (560mm)
WIDTH
22" (560mm)