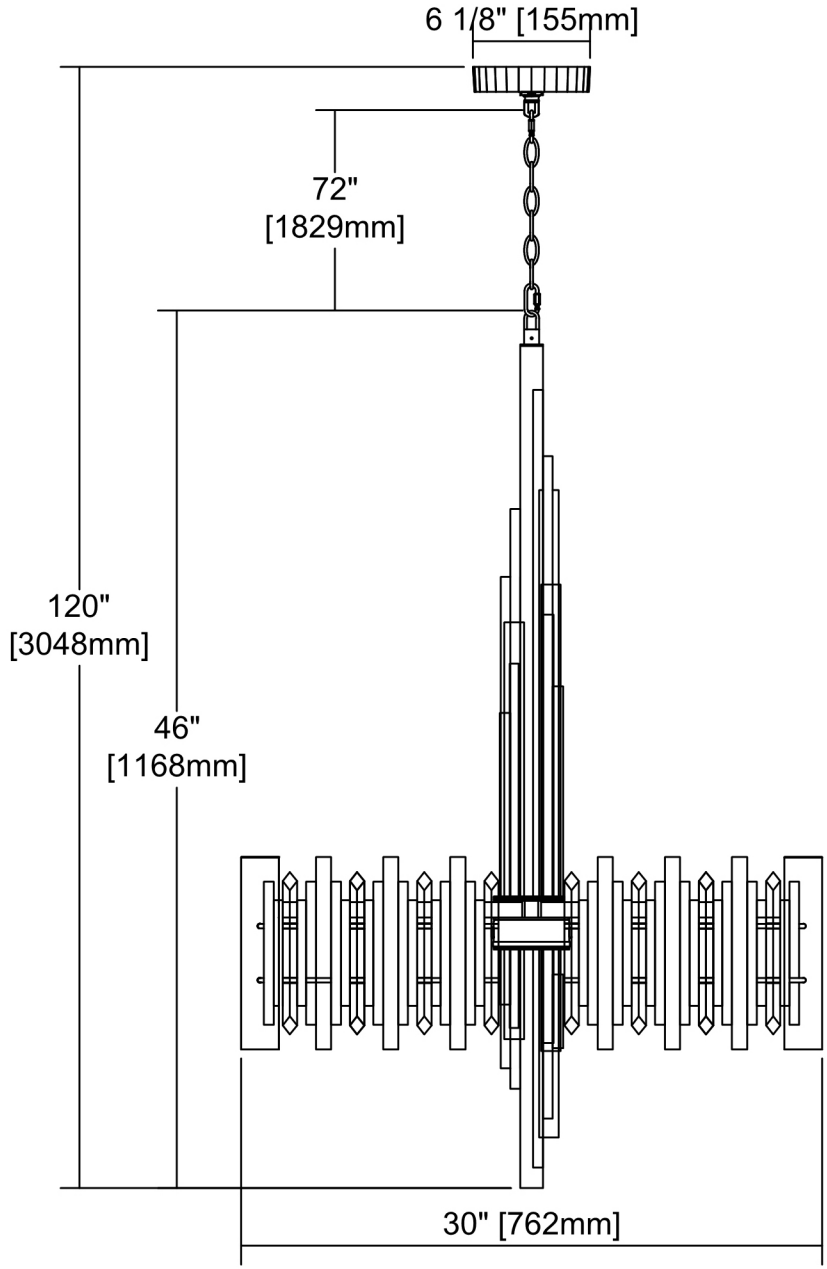
6 1/8" [155mm]
72"
[1829mm]
120"
[3048mm]
46"
[1168mm]
30" [762mm]